mm [inch]

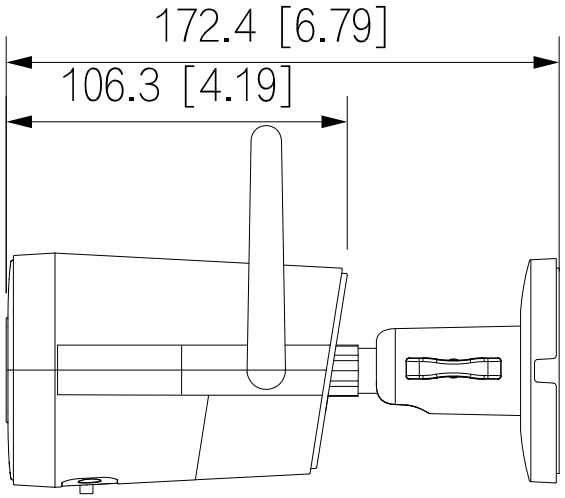
172.4 [6.79]
106.3 [4.19]

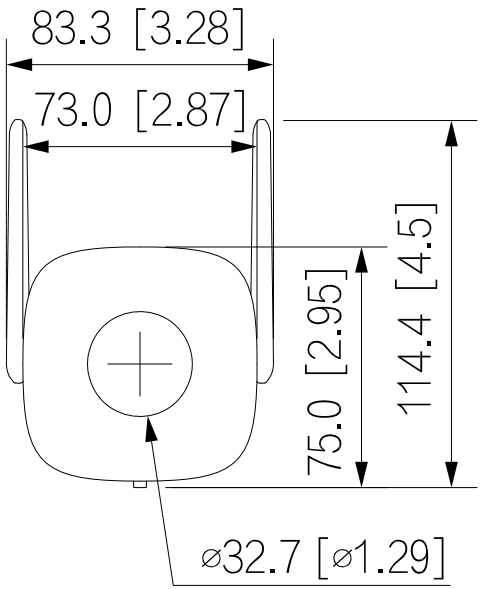
83.3 [3.28]
73.0 [2.87]
75.0 [2.95]
114.4 [4.5]
⌀32.7 [⌀1.29]

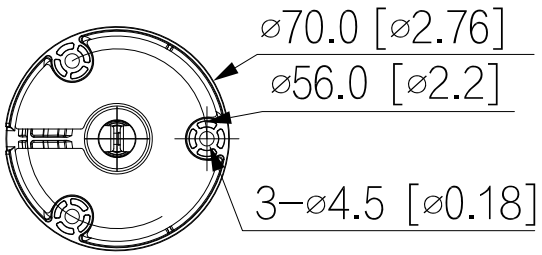
⌀70.0 [⌀2.76]
⌀56.0 [⌀2.2]
3−⌀4.5 [⌀0.18]